LIFTING FLANGE WITH BOLT WITH SAFETY RING

2133.12.

A

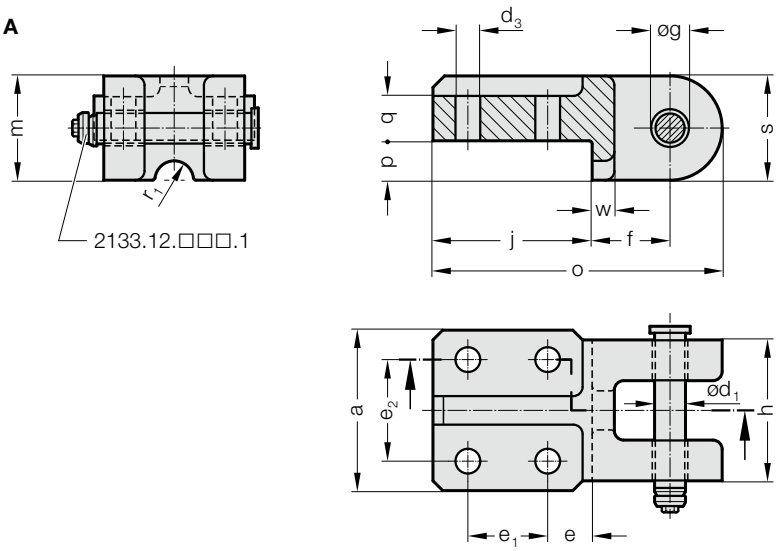

Note:
Order No for spare part bolt with safety ring:
2133.12.□□□.1

B

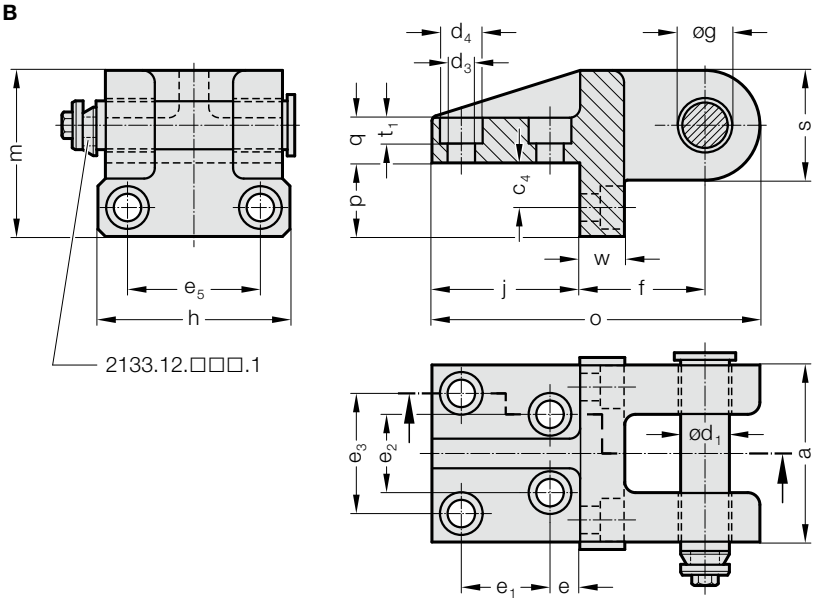

2133.12. Lifting flange with bolt with safety ring

Order No	Shape	max. carrying capacity (2 lifting flanges) [kg]*	d_1	d_3	d_4	e	e_1	e_2	e_3	e_5	f	g H13	h	j	m	o	p	q	r_1	s	t_1	w
2133.12.016	A	1,200	15.6	12.5	-	22.5	40	50	50	-	39	16	70	80	52	145	20	22	10	52	-	11
2133.12.021	A	2,000	20.6	16.5	-	27.5	40	60	60	-	42	21	79	90	56	160	20	26	12	56	-	13
2133.12.026	A	4,000	25.6	21	-	32.5	65	65	65	-	60	26	90	120	70	215	20	40	15	70	-	20
2133.12.034	B	8,000	33	18	28	20	60	56	84	96	85	34	135	100	111	221	50	30	0	72	17	30
2133.12.044	B	14,000	43	22	36	30	70	80	110	130	100	44	180	125	140	270	60	40	0	90	21	40

*The maximum permissible load capacity is to be calculated such that two lifting flanges one their own are capable of carrying or turning the tool.