MOUNTING BRACKET WITH ADAPTER PLATE

2299.530
Mounting bracket

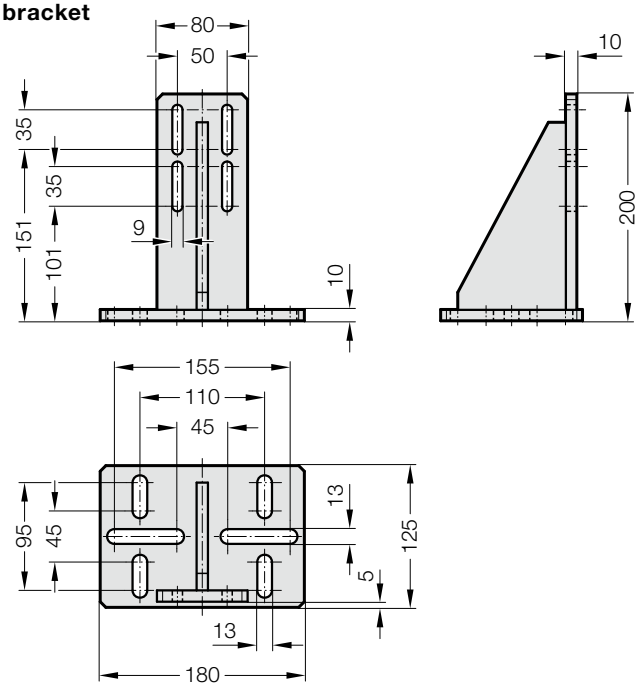

Note:
The mounting bracket and the adapter together allow individual mounting of the transporters 2299.001 and 2299.002.

Fastening screws are not included in scope of delivery.
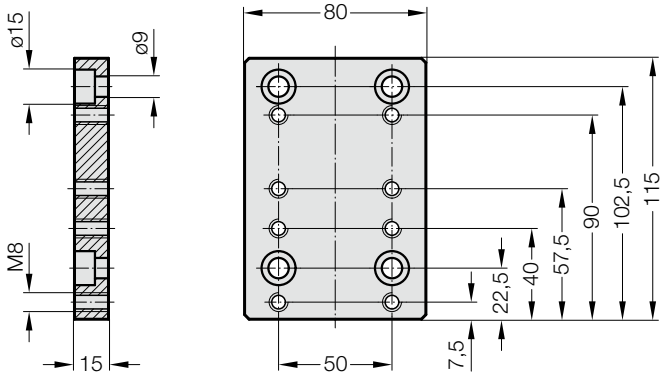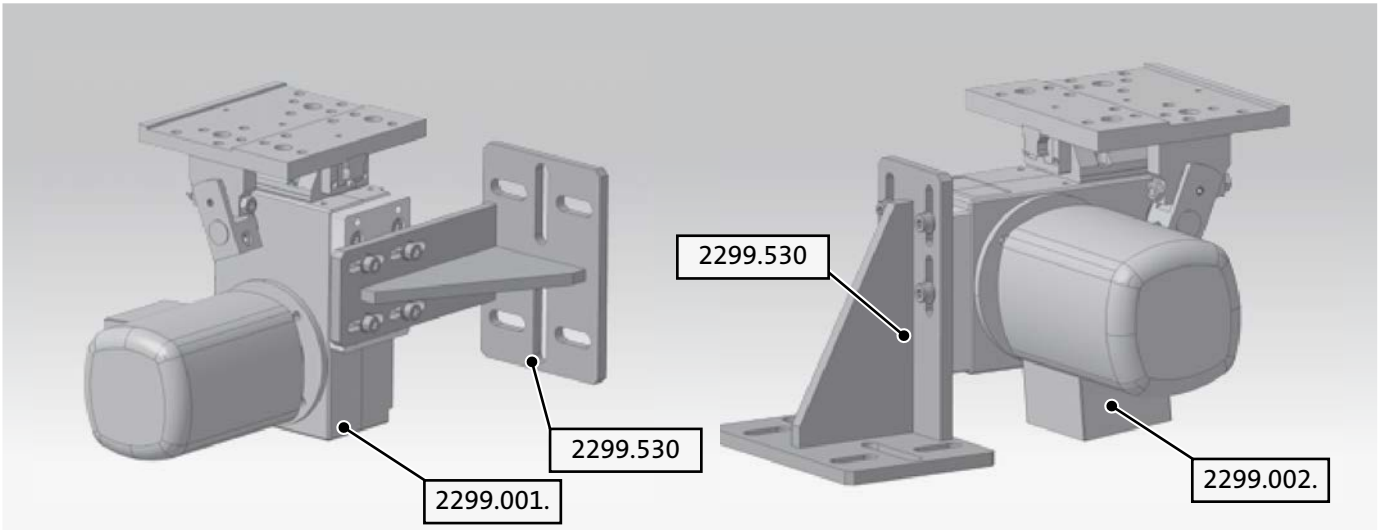
Adapter plate