GAS SPRING, WITH LOW BUILD HEIGHT

Note:
Initial spring force at 150 bar = 750 daN

Order No for spare parts kit: 2485.12.00750

Gas spring without valve
Order No (example): 2485.12.00750. .P

Pressure medium: Nitrogen N_2
Max. filling pressure: 150 bar
Min. filling pressure: 25 bar
Working temperature: 0°C to +80°C
Temperature related force increase: ± 0.3%/°C
Max. recommended extensions per minute:
approx. 15 to 40 (at 20°C)
Max. piston speed: 1.6 m/s

2485.12.00750.

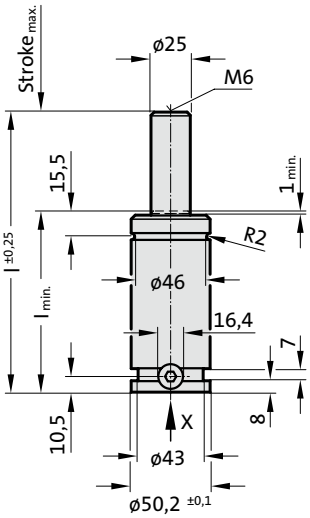

View X - Gas spring

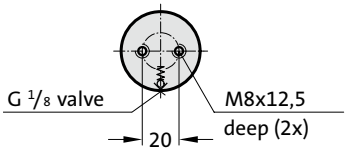

APPROVED PED 2014/68/EU

2485.12.00750.

Gas spring, with low build height

Order No	Stroke$_{max.}$ (s)	$l_{min.}$	l
2485.12.00750.006	6	56	62
2485.12.00750.013	12.7	62.7	75.4
2485.12.00750.019	19	69.1	88.1
2485.12.00750.025	25	75	100
2485.12.00750.038	38.1	88.1	126.2
2485.12.00750.050	50	100	150
2485.12.00750.063	63.5	113.5	177
2485.12.00750.080	80	130	210
2485.12.00750.100	100	150	250
2485.12.00750.125	125	175	300

Initial spring force
versus charge pressure

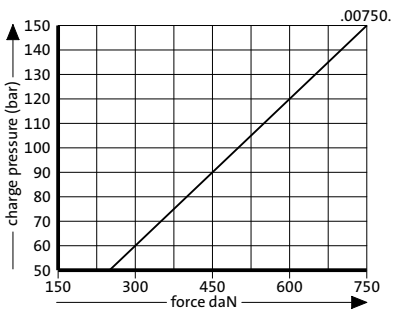

Spring force Diagram displacement versus stroke rise

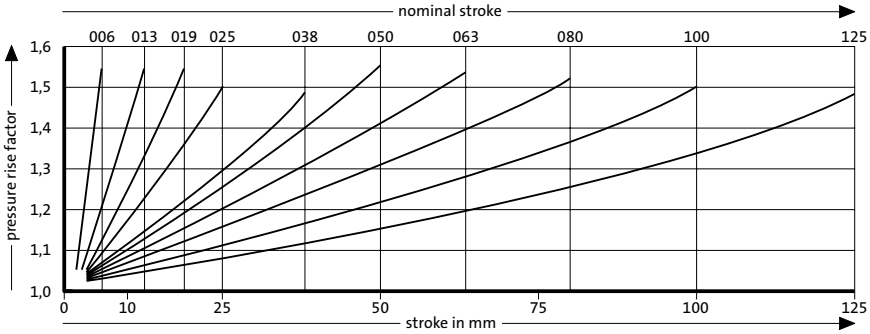

Pressure rise factor accounts for displacement but not external influences!