STRIPPING UNIT - PRESSURE PLATE

2667.1.

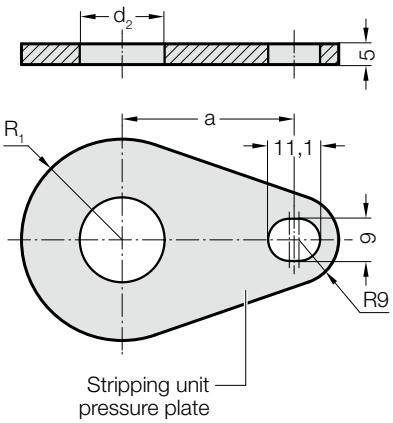

2667.1. Stripping unit - Pressure plate

Order No	d_2	R_1	a
2667.1.010	10	13	28
2667.1.013	13	15.5	31
2667.1.016	16	18	32.9
2667.1.020	20	20.5	34.8
2667.1.025	25	24	39.8
2667.1.032	32	31	41.3
2667.1.038	38	36	45
2667.1.040	40	36	45

Note:
Pressure plate, mounting plate and screw must all be ordered individually.
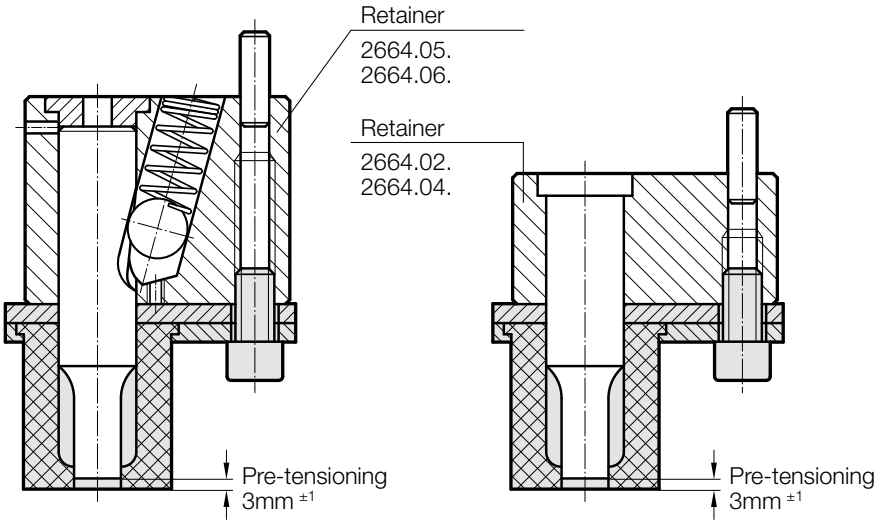
Mounting example