GAS SPRING MOULD LINE

Note:
Initial spring force at 150 bar/20°C is 750 daN

Order No. for spare parts kit: 3487.12.00750

Pressure medium: Nitrogen - N_2
Max. filling pressure depends on working temperature:
150 bar (20°C) at 0°C-80°C
125 bar (20°C) at 80°C-100°C
115 bar (20°C) at 100°C-120°C
Min. filling pressure: 25 bar (20°C)
Working temperature: 0°C to +120°C
Temperature related force increase: ± 0.3%/°C
Max. recommended extensions per minute:
20 (at 0°C-80°C)
15 (at 80°C-100°C)
10 (at 100°C-120°C)
Max. piston speed: 1.0 m/s

3487.12.00750.

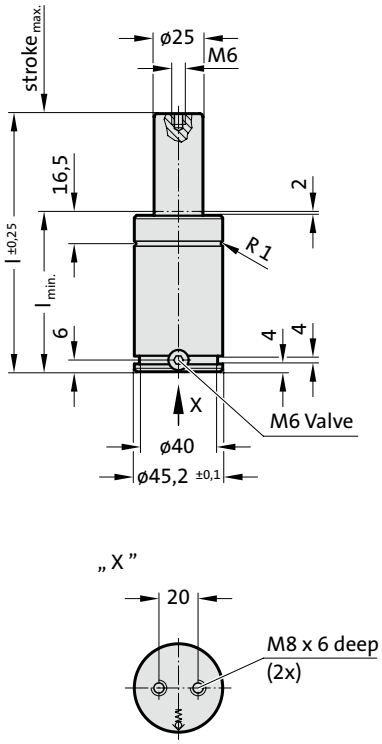

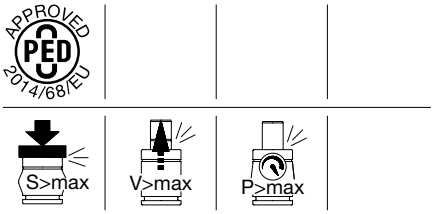

3487.12.00750.

Gas spring MOULD LINE

Order No	Stroke$_{max.}$ (s)	$l_{min.}$	l
3487.12.00750.010	10	42	52
3487.12.00750.013	13	45	58
3487.12.00750.016	16	48	64
3487.12.00750.019	19	51	70
3487.12.00750.025	25	57	82
3487.12.00750.032	32	64	96
3487.12.00750.038	38	70	108
3487.12.00750.050	50	82	132
3487.12.00750.063	63	95	158
3487.12.00750.075	75	107	182
3487.12.00750.080	80	112	192
3487.12.00750.100	100	132	232
3487.12.00750.125	125	157	282

Initial spring force
versus charge pressure

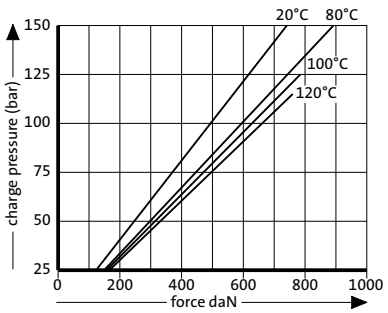

Spring force Diagram displacement versus stroke rise

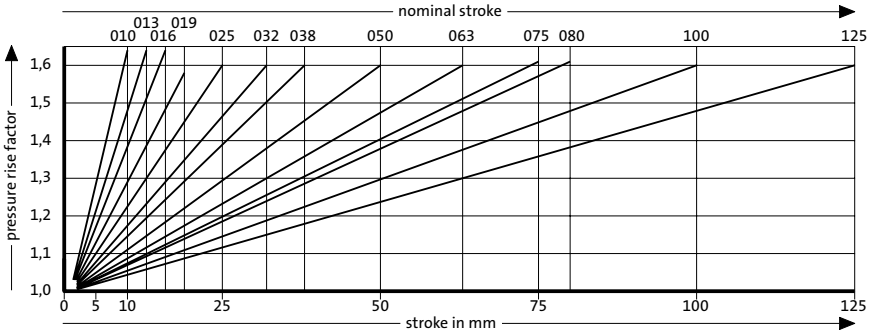

Pressure rise factor accounts for displacement but not external influences!