GAS SPRING MOULD LINE

Note:
Initial spring force at 150 bar/20°C is 1000 daN

Order No. for spare parts kit: 3487.12.01000

Pressure medium: Nitrogen - N_2
Max. filling pressure depends on working temperature:
150 bar (20°C) at 0°C-80°C
125 bar (20°C) at 80°C-100°C
115 bar (20°C) at 100°C-120°C
Min. filling pressure: 25 bar (20°C)
Working temperature: 0°C to +120°C
Temperature related force increase: ± 0.3%/°C
Max. recommended extensions per minute:
20 (at 0°C-80°C)
15 (at 80°C-100°C)
10 (at 100°C-120°C)
Max. piston speed: 1.0 m/s

3487.12.01000.

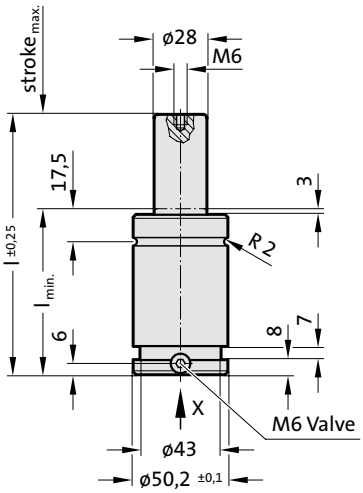

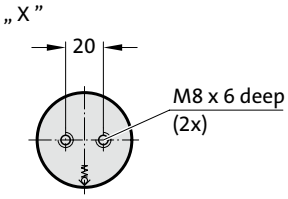

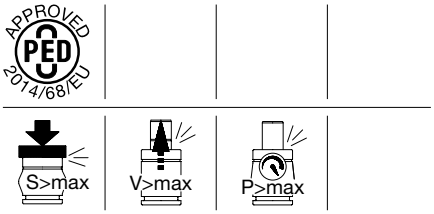

3487.12.01000.

Gas spring MOULD LINE

Order No	Stroke$_{max.}$ (s)	$l_{min.}$	l
3487.12.01000.013	13	51	64
3487.12.01000.016	16	54	70
3487.12.01000.019	19	57	76
3487.12.01000.025	25	63	88
3487.12.01000.032	32	70	102
3487.12.01000.038	38	76	114
3487.12.01000.050	50	88	138
3487.12.01000.063	63	101	164
3487.12.01000.075	75	113	188
3487.12.01000.080	80	118	198
3487.12.01000.100	100	138	238
3487.12.01000.125	125	163	288

Initial spring force
versus charge pressure

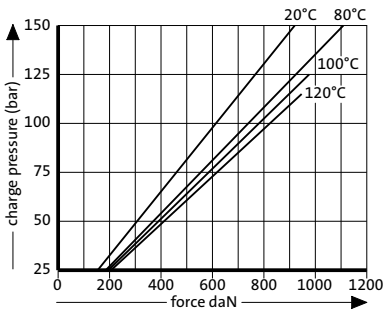

Spring force Diagram displacement versus stroke rise

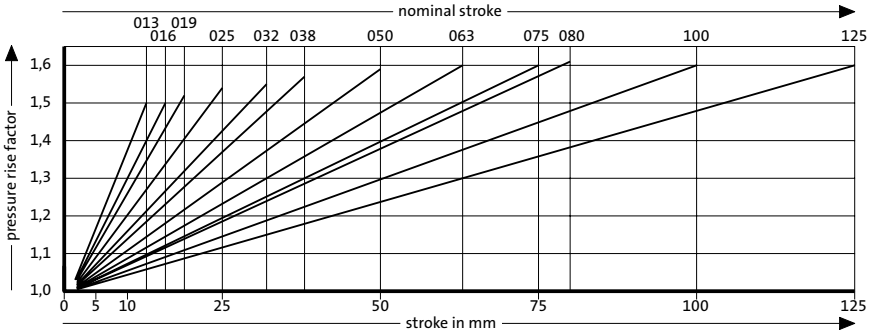

Pressure rise factor accounts for displacement but not external influences!